Curve Creation for the Customized Pump Bid Process

Revisions:

0	13/09/2024	Fluid Dinamic Manager L.DeFranco	QA-HSEM C.Delli Quadri M.Tremolada	R&D Manager M. Borghetti	First issued
Rev.	*Date*	*Issued*	*Verified*	*Approved*	*Description*

COPY COMPLIANT to the original document resident on the computer system at the time of printing

Index

1 Purpose 3

2 Abbreviations 3

3 Scope 3

4 Entities Involved 4

5 Definitions 4

6 Description of “Pump Hydraulic Selector” 6

7 Workflow description 9

Existing pump curve selection 11

Scaled pump curve creation from existing hydraulic 11

Custom pump curve creation from new hydraulic 13

8 Custom Curve Database 14

9 Correlated Processes 15

10 References 15

COPY COMPLIANT to the original document resident on the computer system at the time of printing

1 Purpose

This procedure defines the rules of engagement and the operational steps to be followed during the tender procedure for the creation of customized pump performance curves using the internal software called “Pump Hydraulic Selector”.

2 Abbreviations

AM	After Market
COMOPS	Commercial Operations
DS	Pump Data Sheet
FDD	Fluid Dynamic
IQ:	Intelliquip (pump selection software)
NPD	New Product Development
OE	Original Equipment
OPE	Operational Excellence
PD	Product Design
PDS	Pump Data Sheet
PE	Product Engineering
PEC	Pump Expected Curve
PHS	Pump Hydraulic Selector
PPC	Pump Performance Curve
PRM:	Proposal Manager
PT	Product Technology
R&D	Research and development
SE:	Services Engineer
TE:	Technical Engineer
TPI	Trillium Pumps Italy
TPUS	Trillium Pumps US
UCS	Structural Analysis

3 Scope

The scope of the document is to furnish the rules of engagement of each team whenever appropriate selection is not available in IQ environment and, consequently, a customized pump

COPY COMPLIANT to the original document resident on the computer system at the time of printing

performance curves creation is necessary during the Quote to Cash process, across both OE and AM wherever it is equivalent.

The procedure is applicable to the performance curve prediction of all centrifugal pumps for the Nova Milanese and La Spezia plants.

4 Entities Involved

Production, use and management of pump performance curves is a process that mainly involves the following entities within the company:

- **Commercial Operations**: as offer owner, commercial operations use available curves and ask for an evaluation, modification and, if required, new curve creation if there is a new application or none of the available selections are fit for the current project requests.
- **Product Engineering**: it is the entity responsible for the curve database. Activities on this database include the creation of new curves (scaled from existing ones or created *ad hoc* by R&D), variants and curve revisions according to available test results.
- **After Market Engineering**: it is the entity responsible of designing and producing parts, components, and systems that are used to replace or enhance the original equipment after it has been sold.
- **R&D**: it is the entity responsible of creation, management and maintenance of hydraulic database and its duties include the design and validation of new hydraulics requested from Product Engineering and that cannot be obtained from existing hydraulics.
- **Product Management**: does not intervene directly in the workflow, unless a new pump with operating conditions outside predefined boundaries is required for the selection.

5 Definitions

- **Pre-engineered families**: a pump family or range is pre-engineered when the performance of its products is already included in a predefined coverage. They are typically employed when the additional costs due to standardization of most of the pump design is justified by the type of market or typical operating conditions for which the product is designed, to allow a quick customization based on several predefined options for the most typical requests. The pre-engineered approach also allows to build up a more comprehensive database of

COPY COMPLIANT to the original document resident on the computer system at the time of printing

references of almost-similar pumps, as requested for their reference markets. Pre-engineered pump families are typical of Oil & Gas and process applications within a certain range of performance.

- **Custom families**: a pump range or family is defined as custom when the products belonging to it are designed with a high level of customization, allowing the possibility to design and manufacture new patterns and higher development lead times, that are justified by the need of reducing cost and complying to the specific needs of their reference markets. Custom pump families are typical of water treatment, power, and even process and Oil & Gas for very high operating capacities or power.
- **Pre-engineered pumps:** products belonging to a pre-engineered or a custom family that has been designed to work for the typical operating conditions and specifications of its reference market (e.g. that is compliant to API 610 Standard).
- **Custom pumps**: products that are designed for a specific application and are in general not suitable to be employed in different applications for the same reference market without some design/mechanical modifications.
- **Pre-engineered curves**:
    - curves that belong to pre-engineered pump families within the operating range for which that family was intended, or
    - curves that belong to a custom family when that pump has already been developed and tested.
- **Custom curves**:
    - curves of pumps that belong to a custom family and have not been developed yet or
    - curves of pumps that belong to a pre-engineered family and are positioned outside the family operating range or
    - curves of pumps that belong to a pre-engineered family, for which the operating point is within the standard family operating range but have other special requirements that make it cost effective to develop a new pump specifically for the application.

COPY COMPLIANT to the original document resident on the computer system at the time of printing

6 Description of "Pump Hydraulic Selector"

The workflow related to "Pump Hydraulic Selector" or PHS tool usage is described in Figure 1.

Once the on-site performances of the pump have been defined, the user converts the pump performances in a compound of up to three stage performances, related to each set of hydraulic within the pump (this is applicable on multistage pumps, where different sets of hydraulics can be selected for the suction stage, for the intermediate stages and for the last stages). This action is performed by using a MS Excel spreadsheet [1]. For each set defined by [1], a selection of scaled and trimmed hydraulics that fit the rated point is provided by PSH tool [2]. The pump performances are assembled using a MS Excel spreadsheet [3] starting from the selected hydraulics suggested on PHS for each set and finally the on-site pump performance curve of the selected assembly is provided.

The PHS tool is a selection software of existing and scaled hydraulics based on the database containing the hydraulic performances of the single stage.

Starting from the rated performances of the single stage at fresh water conditions (that means water at 20°C or 68°F, S.G = 1 and kinematic viscosity = 1 CSt) the tool scales up or down the performances of existing stages at rated velocity and filters the solution that, if properly trimmed, can achieve the rated conditions into the range 80%-110% of Best Efficiency Point.

In parallel the tool provides a list of hydraulics that, through affinity and trimming law applications [4], fulfils the rated conditions into the range 80%-110% of Best Efficiency Point.

Both the lists can be further filtered through the application of optional constrains based on Eta, NPSH, H0, D2, range of specific speed.

The tool also provides a graphical view of the filtered solutions in terms of efficiency, NPSH, Head at shutoff. The data will be compared to the maximum theoretical value or the suggested one if any.

The PHS tool can be used either with Metric or with US units.

The PHS tool main steps for the selection of existing pump is reported below.

- Rated Stage Performance at fresh water conditions
- Scale existing pump performances at rated speed
- Query on database Module 2 «Existing Pumps»
- Search for solution that fit the Rated Point

COPY COMPLIANT to the original document resident on the computer system at the time of printing

- Baseline screened existing pumps
- Definition of the trimming factor
- Further screening by optional constrains
- Final screening of existing pumps

The PHS tool main steps for the selection of scaled pumps is reported below.

- Rated Stage Performance at fresh water conditions
- Calculation of specific speed at rated condition
- Query on database Module 2 «Scaled Pumps»
- Search for hydraulics that fit the specific speed
- Definition of the geometric scale factor
- Baseline screened existing pumps
- Definition of the trimming factor
- Further screening by optional constrains
- Final screening of existing pumps

Considering that PSH tool [2] refers exclusively to stages performances at fresh water conditions, [1] and [3] must be used to correctly transform the data from pump to stage condition.

The general workflow of the tool is shown in Figure 1:

COPY COMPLIANT to the original document resident on the computer system at the time of printing

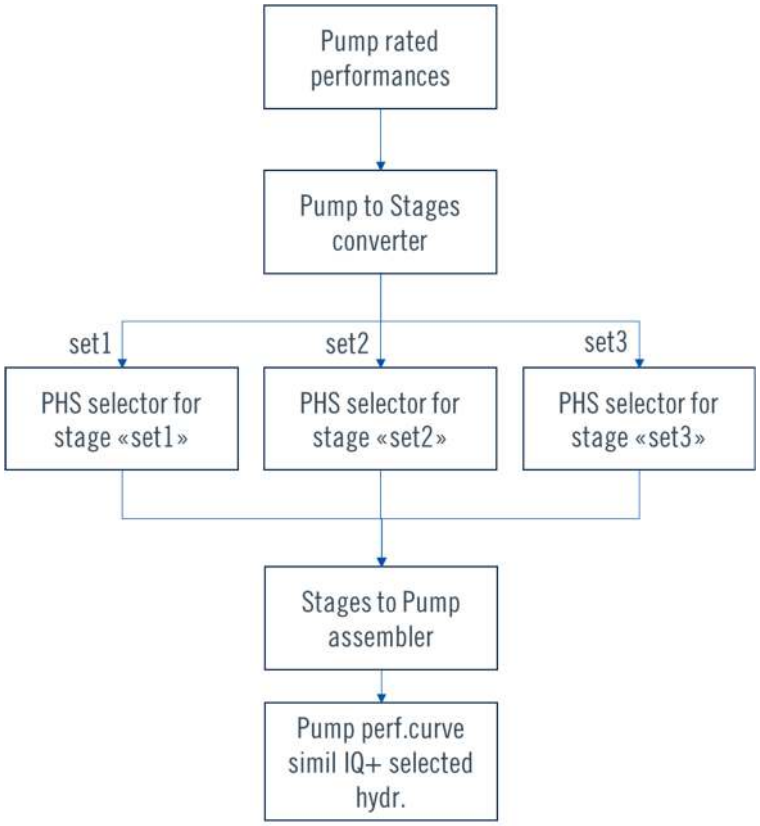

Figure 1. Rapid hydraulic tool workflow

In case of no existing hydraulic or tested pump matches the rated point PSH [1] will exit with no solutions and a new hydraulic must be designed.

COPY COMPLIANT to the original document resident on the computer system at the time of printing

7 Workflow description

The Deployment Flowchart in Figure 2 shows the standard process to be used during the definition of a customer performance curve, for newly produced units (OE or Replacement pumps). Pump performance curves for retrofit units are excluded from the flowchart and discussed in separate documentation.

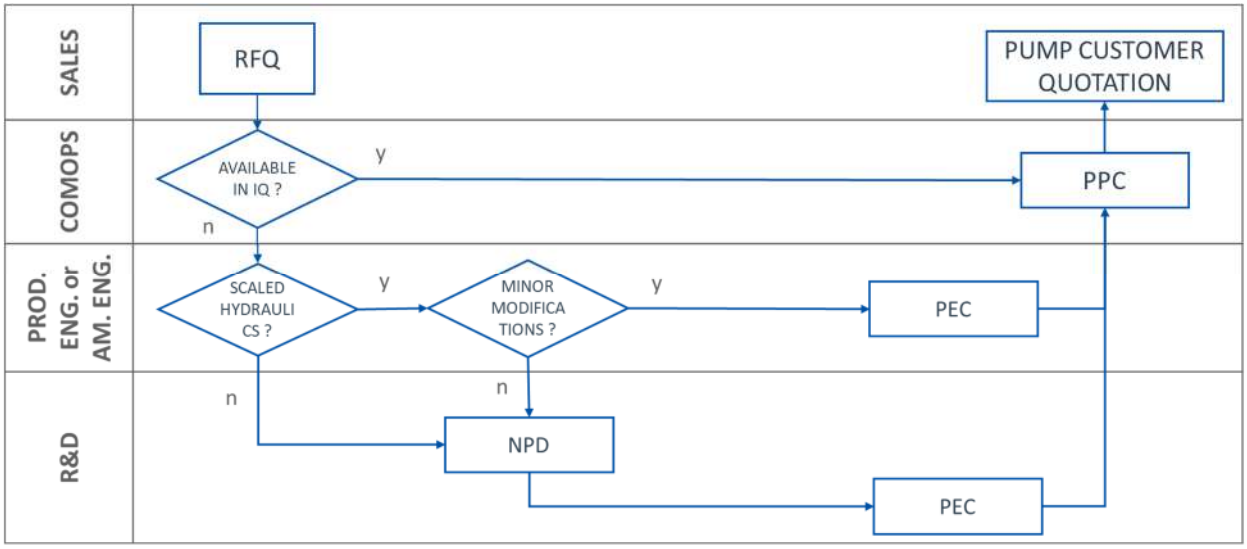

Figure 2. Deployment Flowchart - Performance curve definition

COMOPS is the owner of the DS interpretation and identification of the main performance data used for the analyses. The list of data that COMOPS must provide is in the Table 1.

Table 1.data extraction from DS

Parameter	Description
Ro	Fluid density
cP	Fluid cinematic viscosity
Fluid	Fluid type
T	Fluid temperature
Pvap	Vapour pressure
VFD	Use of VFD or fixed motor speed

COPY COMPLIANT to the original document resident on the computer system at the time of printing

Q	Flow
Pd	Discharge pressure
Ps	Suction pressure
H	Pump head
NPSHav	Available NPSH
Mix	Mixture composition, if applicable
GVF	Gas Volume Fraction (Qgas/Qtot) if applicable
PPM	Particles quantity, if applicable
Qmax	Maximum flow
NPSHav.qmax	Available NPSH at maximum flow
Grade	Tolerance grade of the performance curve accepted by the customer
NPSHmargin	NPSH margin std accepted by the customer if applicable

The table shall be prepared for each operative condition and shall be shared with other teams if further actions on selecting the performance curve are needed.

COMOPS [5] is the owner of the definition of Customer Performance Curve (PPC).

The actions described in the present section are executed by the following roles:

- For ComOps (both OE and AM) — Proposal Manager (PRM)
- For Product Engineering — Technical Engineer (TE)
- For After market Engineering — Services Engineer (SE)
- For R&D — Fluid Dynamics Engineer (FDE)

Mainly three scenarios are considered:

1. Existing curve: The rated conditions match an existing pump performance curve stored on IQ software.

COPY COMPLIANT to the original document resident on the computer system at the time of printing

2. Scaled curve from existing hydraulics: The rated conditions match an existing specific speed stored on PHS software [2]. Minor modifications can be used to adjust the performance curve.
3. New curve from new hydraulics: No existing specific speed matches the rated conditions.

7.1 Existing pump curve selection

Pumps that belong to pre-engineered pump families within their “standard” operating ranges and conditions are considered as pre-engineered pumps. These pumps must be selected by using the software IQ. If the required operating conditions fit properly with an existing pump stored in IQ, the PPC will be prepared accordingly.

In this scenario no other team shall be involved.

7.2 Scaled pump curve creation from existing hydraulic

Whenever it is not possible to select a pump using IQ, the Product Engineering team (or After Market Engineering team where it is applicable) shall be involved on the definition of the performance curve.

The COMOPS team has in charge the preparation and the sharing of the main data according to Table 1 and creates an engineering ticket to the Product Design team.

TE, within the Product Engineering team, checks the selection, verifying if a solution can be found with a different selection and/or scaling and/or trimming existing hydraulics and/or with minor modifications that do not require change in the hydraulic. TE is the owner of this second level searching. The activity must be executed using exclusively the Pump Hydraulic Selector tool.

TE is the owner of the module 0 [1], 1 [2] and 3 [3] validation.

Using these modules included in PHS tool, the Product Engineering team will provide the expected performance curve by scaling and/or trimming the best hydraulics of the company database and will rerate the pump performance by means of minor corrections for roughness or clearance or extra losses application for multistage configuration or high energy pump conversion.

TE will select the best solution from the list of hydraulics proposed by [2] during the searching phase.

Pump Hydraulic Selector tool [2] can provide two lists of solutions:

COPY COMPLIANT to the original document resident on the computer system at the time of printing

- the first one is based on existing pumps with rotational speed that are out of the limit imposed by IQ;
- the second one is based on scaling the best hydraulic available from the company database.

For both the lists Product Engineering team shall check the feasibility of each selection, identifying the required actions to adjust the existent solution for fitting the rated performances. Whenever the needed adjustments have a weak impact on the performance then they are deemed minor modifications, and the PEC can be managed by PE.

The Product Engineering team will provide the PEC in simil-IQ format and will share it to the COMOPS that will configure the final PPC.

If the pump fills a gap in the coverage of the pump range, then the selection will be treated as “pre-engineered” item.

If the pump does not fill a coverage gap, the selection will be treated as “custom” item. PEC are included in the IQ database after an order for the pump has been acquired, but they are created as concealed and not available for selection.

After a scaled pump has been manufactured and tested, PEC is updated according to test, product line data is corrected and all Custom pumps are made available in IQ, allowing anyone else to select them.

COPY COMPLIANT to the original document resident on the computer system at the time of printing

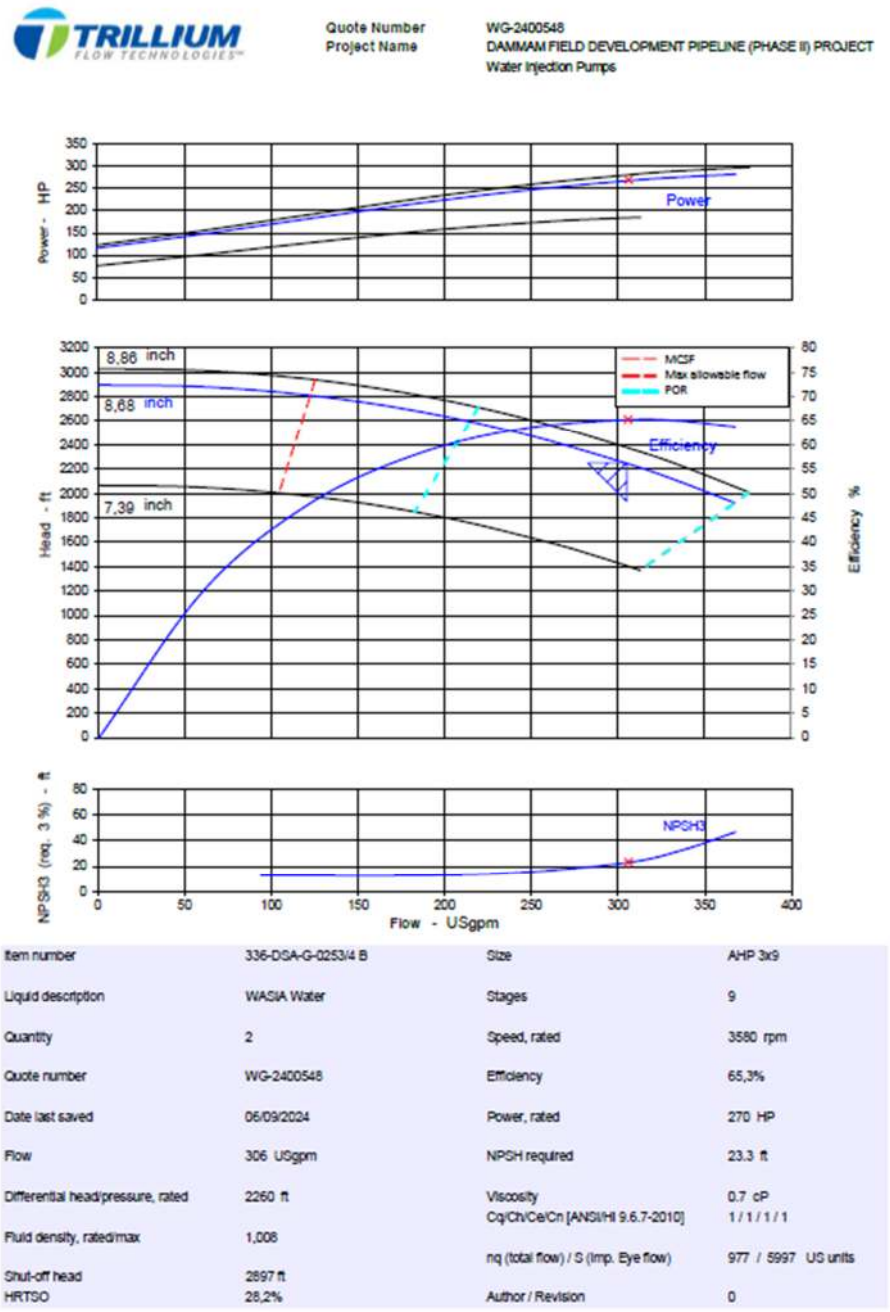

Figure 3. Performance Curve in simil-IQ format

7.3 Custom pump curve creation from new hydraulic

Whenever no good results are found by the Pump Hydraulic Selector tool or if Product Engineering team (or After Market Engineering team where it is applicable) consider that major modifications are still required then the pump can be classified as NPD.

In this case R&D has the ownership of the PEC definition.

COPY COMPLIANT to the original document resident on the computer system at the time of printing

For this pumps Product Engineering team (or After Market Engineering team where it is applicable) will open a ticket to R&D for the design of the new hydraulics or redesign of existing ones.

PE (or AM) will share to R&D all the data necessary to execute the study, including Table 1 and the initial geometry and geometric constrains in case of major modification of an existing hydraulic.

R&D team will use advanced numerical analyses to define the PEC.

R&D team will provide the PEC to COMOPS.

R&D team will provide the PEC in the IQ database after an order for the pump has been acquired, but they are created as concealed and not available for selection.

8 Custom Curve Database

When a custom curve is released, a new row is added to the “new curve database”, a file in MS Excel format that is intended to track every time a requested pump is not available in the existing range. The intent is both to track the performance modification that require new patterns or hydraulic modifications and to provide data to Product Management to identify possible expansion opportunities and consequently revise the product range coverage.

This includes both custom pumps and pre-engineered pumps, the latter in the following conditions already discussed above:

- the pump fills a gap in the product line coverage or the selection point falls outside the coverage,
- the existing pumps, though covering the selection point, are not acceptable for the required operating conditions, so a new pump (or a pump with major hydraulic modifications) is required,
- operating conditions can be met with significant modifications through machining or other adjustments that affect performance (e.g. throat area enlargement).

New curve database is archived within Trillium Flow Technology intranet in the following folder:

GRP-Pump Product Roadmap

and made available to the selected users who have the responsibility to maintain it up to date, typically TE (and SE when applicable) within Trillium Pumps Italy.

COPY COMPLIANT to the original document resident on the computer system at the time of printing

The file itself has been constructed to comply with the needs of all the entities involved and for this reason is susceptible of structure changes during time, provided that the new structure is compatible with the previously inserted data.

Outside TPI, the same database is also available to TPUS in case a new curve is required for a selection, with the same criteria described above.

9 Correlated Processes

A) Standard Selection using IQ
B) Weight Estimation
C) Cost Estimation
D) Document Flow

10 References

[1]-.User Manual Module 0

[2]- MOD-1.User Manual.

[3]- MOD-3.User Manual

[4] SOP-475: Method for Refiguring Pump Performance from Tested Data

[5] PRO-037: Commercial Operations "Quote To Cash" Flow Management

[6] G.10.00.22: After Market Division - Opportunità di mercato

COPY COMPLIANT to the original document resident on the computer system at the time of printing